PERFORMANCE

LETT Shell&Tube Evaporators are used in industrial and comfort cooling units. LETT Evaporators are manufactured in order to provide low pressure loss and high efficiency starting from a cooling capacity of 20 Kw up to a capacity of 1500 Kw for RCD and RCD series and from 100 Kw up to 1500 Kw for RPS and RPD series (when used with R134A gas). Having adopted customer satisfaction as its main principle, LETT also renders services for customer focused projects under different working conditions in addition to its standard product range.

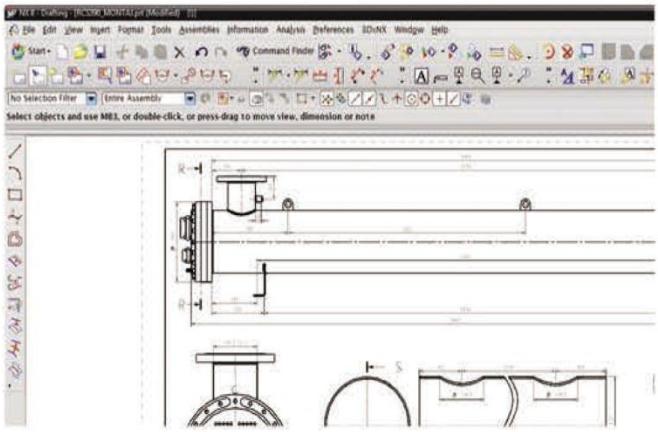

DESIGN AND MATERIAL

LETT Shell&Tube evaporators are designed to minimize the negative effects of corrosion and vibration. Copper pipes carrying heat transfer in RCS and RCD series are designed in U-shape to maximize the efficiency. Also U-shaped copper pipes provides easy disassembly during periodical inspection and maintenance. To acquire maximum capacity on minimum surface area with a special head cover, copper pipes carrying the heat transfer in RPS and RPD evaporator series are designed in a straight geometrical shape. LETT offers its clients evaporators with reserve tank in range of 50 to 1000 liters in 8 different sizes. These evaporators covers less space when reserve thank usage is necessary.
Materials used in LETT shell&tube type evaporators are chosen in complience with “European Pressure Vessel Codes”
Materials Used in LETT Standard Shell&Tube Type Evaporators;

- Carbon steel head cover, tube sheet and body,
- Copper heat transfer pipes,
- Polyethylene baffles,
- Asbestos-free gaskets,
- Bonded steel bolts,

Stainless steel tube sheets, body and heat transfer pipes can be used

QUALITY AND TEST

Mechanical calculations of LETT evaporators are done in compliance with TS EN 13445-5 and manufactured in compliance with ISO 9001:2008 Quality Insurance System is approved by Germanischer Lloyd. All LETT products are CE marked. Refrigerant side of LETT evaporators are tested with 30 bars and water side of the evaporators are tested with 12 bars of nitrogene. All LETT products are under 2 years warranty for production errors. Please consider below values for more accurate product selection,

Fouling Factor f.f. (m^2K/W)	
City Water in Closed Circuit	0,000043
City Water in Open Circuit	0,000086
Gylicol Solutions < 40%	0,000086
Gylicol Solutions > 40%	0,000172

	Design Temperature (min / max ℃)	Design Pressure (Bar)	
ce	-10 / +90	Refrigerant: 30	Water: 10

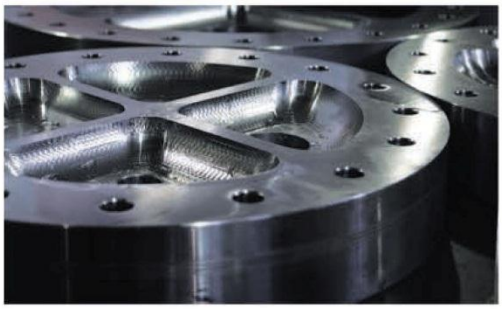

EXCELLENT - EFFICIENT - ECONOMIC

RCS SERIES			20	30	40	50	60	70	80	100	135	145	165
Capacity	Q_N	kW	21	30	40	50	60	74	86	104	130	143	162
Flow Rate	W_N	m³/h	4	5	8	9	11	13	15	18	22	25	28
Pressure Drop	Δ_P	kPa	10	13	27	41	32	48	56	73	48	40	51
Circuit Number		S nr	1										

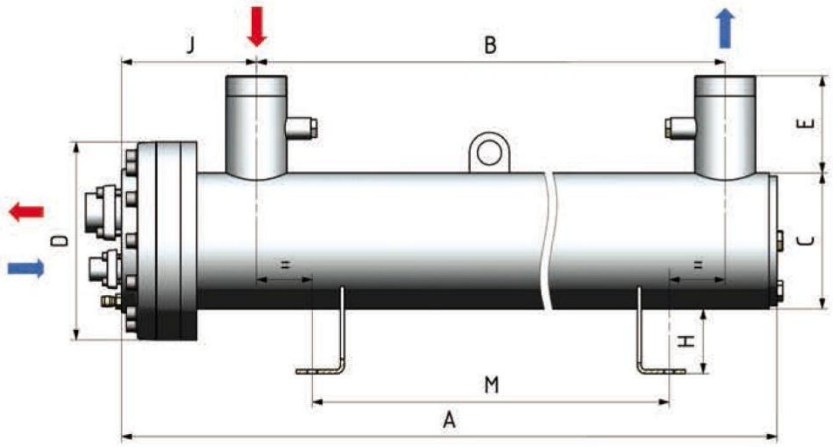

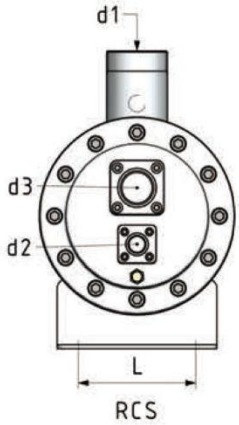

			20	30	40	50	60	70	80	100	135	145	165
Dimensions	A	mm	865	1015	1215	1375	1285	1435	1635	1785	1830	2110	2310
	B	mm	660	810	1000	1160	1050	1200	1385	1535	1555	1835	2035
	C	mm	140	140	140	140	168	168	168	168	194	194	194
	D	mm	195	195	195	195	245	245	245	245	260	260	260
	E	mm	120	120	120	120	120	120	120	120	120	120	120
	H	mm	80	80	80	80	80	80	80	80	80	80	80
	J	mm	160	160	160	160	170	170	170	170	195	195	195
	L	mm	117	117	117	117	147	147	147	147	180	180	180
	M	mm	550	700	900	1060	910	1060	1260	1410	1200	1500	1700
Connections	d1	water	G 11	G 11	G 2	G 2	G 21	G 21	G 21	G 21	G 3	G 3	G 3
	d2	mm	FL 22	FL 22	FL 22	FL 22	FL 22	FL 22	FL 22	FL 22	FL 35	FL 35	FL 35
	d3	mm	FL 35	FL 35	FL 35	FL 35	FL 42	FL 42	FL 42	FL 42	FL 54	FL 54	FL 54
Refrigerant Side Volume	Vr	liter	3,8	4,5	5,4	6,1	7,9	8,9	10,3	11,2	15,3	17,8	19,7
Water Side Volume	Vw	liter	5,9	7,1	8,7	10,0	14,5	16,2	18,5	20,4	27,4	31,7	34,7
Weight	P	kg	40	43	49	53	69	74	81	85	112	125	134

R407C EVAPORATORS

205	245	290	340	390	450	500	590
202	242	295	345	395	450	515	585
35	42	50	59	68	77	88	99
43	54	35	48	65	33	43	55
1							

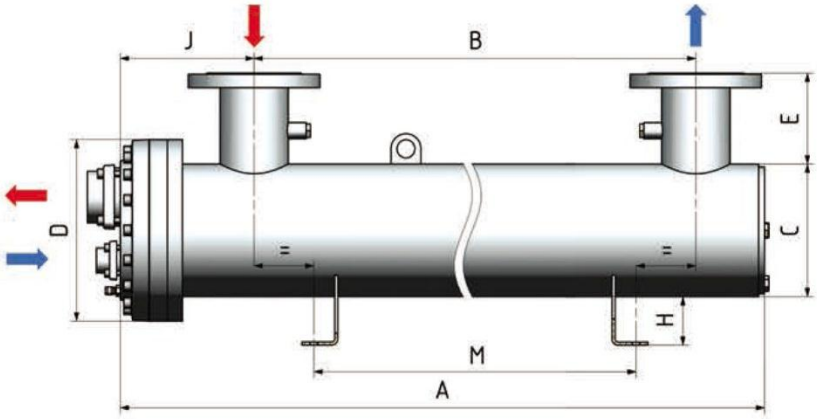

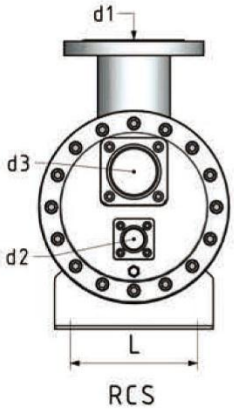

205	245	290	340	390	450	500	590
2340	2640	2670	2670	2670	2720	2720	2720
2000	2300	2270	2270	2270	2270	2270	2270
219	219	273	273	273	324	324	324
300	300	350	350	350	420	420	420
150	150	150	150	150	150	150	150
80	80	100	100	100	100	100	100
225	225	255	255	255	285	285	285
200	200	245	245	245	280	280	280
1800	2100	2100	2100	2100	2100	2100	2100
DN 100	DN 100	DN 125	DN 125	DN 125	DN 150	DN 150	DN 150
FL 35	FL 35	FL 42	FL 42	FL 42	FN 42	FL 42	FL 42
FL 80	FL 80	FL 80	FL 80	FL 80	FL 80	FL 80	FL 80
26,5	30,0	36,9	41,7	47,8	56,5	64,3	72,8
47,5	53,6	98,5	93,0	85,9	139,8	130,8	121,0
167	176	230	237	245	308	320	337

Nominal Data		
Refrigerant		R 407 C
Water Inlet - Outlet Temparature		12 / 7 °C
Evaporating Temperature (DEW)		2,75 °C
Superheat	Δt sup.	4 °C
Fouling Factor	f.f.	0,000043 m²K/W

d1	Water Connections	Wn	Water Flow Rate
d2	Refrigerant Inlet	Δ_p	Water Side Pressure Drop
d3	Refrigerant Outlet	S nr	Compressor Circuit Number

EXCELLENT - EFFICIENT - ECONOMIC

RCD SERIES			20	30	40	50	60	70	80	100	135	145	165
Capacity	Q_N	kW	21	30	40	50	60	74	86	104	129	143	162
Flow Rate	W_N	m³/h	4	5	8	9	11	13	15	18	22	25	28
Pressure Drop	Δ_P	kPa	10	13	27	41	32	48	56	73	48	40	51
Circuit Number		S nr	2										

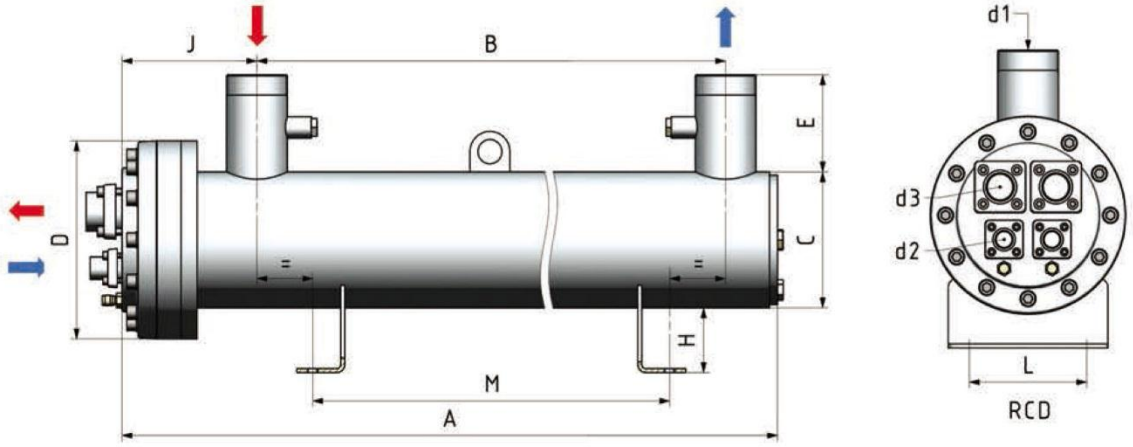

			20	30	40	50	60	70	80	100	135	145	165
Dimensions	A	mm	865	1015	1215	1375	1285	1435	1635	1785	1830	2110	2310
	B	mm	660	810	1000	1160	1050	1200	1385	1535	1555	1835	2035
	C	mm	140	140	140	140	168	168	168	168	194	194	194
	D	mm	195	195	195	195	245	245	245	245	260	260	260
	E	mm	120	120	120	120	120	120	120	120	120	120	120
	H	mm	80	80	80	80	80	80	80	80	80	80	80
	J	mm	160	160	160	160	170	170	170	170	195	195	195
	L	mm	117	117	117	117	147	147	147	147	180	180	180
	M	mm	550	700	900	1060	910	1060	1260	1410	1200	1500	1700
Connections	d1	water	G 11	G 11	G 2	G 2	G 21	G 21	G 21	G 21	G 3	G 3	G 3
	d2	mm	FL 16	FL 16	FL 16	FL 16	FL 22	FL 22	FL 22	FL 22	FL 22	FL 22	FL 22
	d3	mm	FL 28	FL 28	FL 28	FL 28	FL 35	FL 35	FL 35	FL 35	FL 42	FL 42	FL 42
Refrigerant Side Volume	Vr	liter	3,8	4,5	5,4	6,1	7,9	8,9	10,3	11,2	15,3	17,8	19,7
Water Side Volume	Vw	liter	5,9	7,1	8,7	10,0	14,5	16,2	18,5	20,4	27,4	31,7	34,7
Weight	P	kg	40	43	49	53	69	74	81	85	112	125	134

R407 EVAPORATORS

205	245	290	340	390	450	500	590
202	242	295	345	395	450	515	585
35	42	50	59	68	77	88	99
43	54	35	48	65	33	43	55
2							

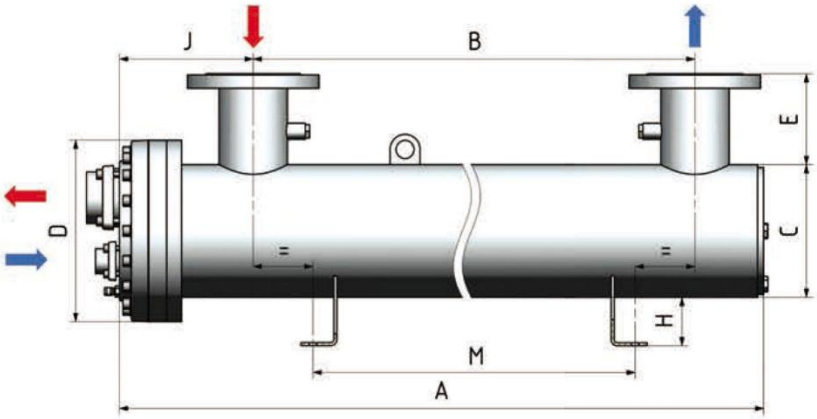

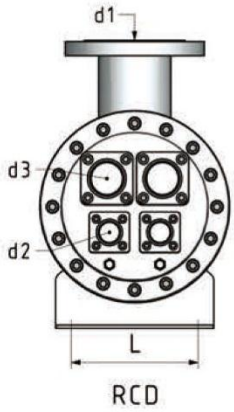

205	245	290	340	390	450	500	590
2340	2640	2670	2670	2670	2720	2720	2720
2000	2300	2270	2270	2270	2270	2270	2270
219	219	273	273	273	324	324	324
300	300	350	350	350	420	420	420
150	150	150	150	150	150	150	150
80	80	100	100	100	100	100	100
225	225	255	255	255	285	285	285
200	200	245	245	245	280	280	280
1800	2100	2100	2100	2100	2100	2100	2100
DN 100	DN 100	DN 125	DN 125	DN 125	DN 150	DN 150	DN 150
FL 35	FL 35	FL 42	FL 42	FN 42	FL 42	FL 42	FL 42
FL 54	FL 54	FL 67	FL 67	FL 67	FL 80	FL 80	FL 80
26,5	30,0	36,9	41,7	47,8	56,5	64,3	72,8
47,5	53,6	98,5	93,0	85,9	139,8	130,8	121,0
167	176	230	237	245	308	320	337

Nominal Data		
Refrigerant		R 407 C
Water Inlet - Outlet Temparature		12 / 7 °C
Evaporating Temperature (DEW)		2,75 °C
Superheat	Δt sup.	4 °C
Fouling Factor	f.f.	0,000043 m²K/W

d1	Water Connections	Wn	Water Flow Rate
d2	Refrigerant Inlet	Δ_p	Water Side Pressure Drop
d3	Refrigerant Outlet	S nr	Compressor Circuit Number

EXCELLENT - EFFICIENT - ECONOMIC

RCD SERIES			660	770	920	1050	1150	1250	1350	1500
Capacity	Q_N	kW	665	775	920	1050	1150	1250	1360	1500
Flow Rate	W_N	m³/h	116	132	160	181	200	213	236	265
Pressure Drop	Δ_P	kPa	54	75	58	62	59	74	72	82
Circuit Number		S nr	2							

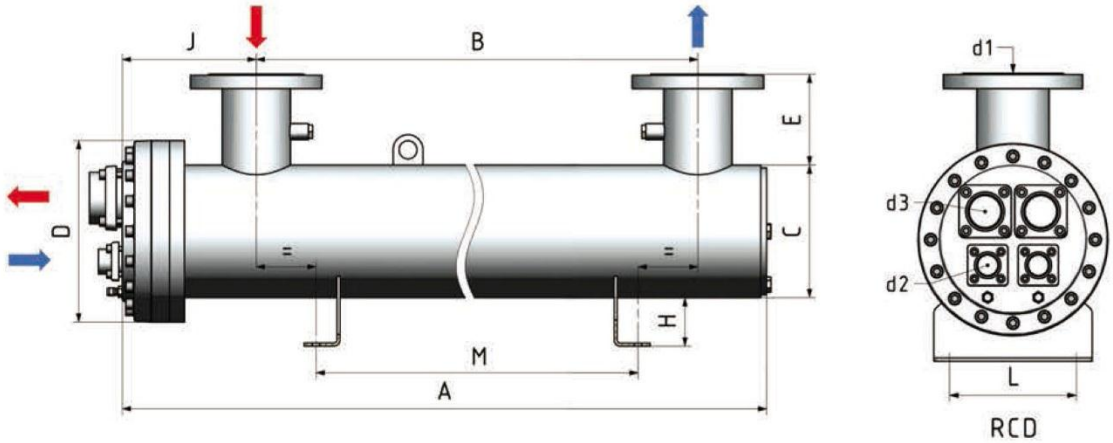

			660	770	920	1050	1150	1250	1350	1500
Dimensions	A	mm	2750	2750	2750	3240	3275	3275	3285	3285
	B	mm	2200	2200	2200	2700	2700	2700	2700	2700
	C	mm	406	406	406	406	457	457	508	508
	D	mm	510	510	510	510	570	570	620	620
	E	mm	200	200	200	200	200	200	200	200
	H	mm	100	100	100	100	100	100	100	100
	J	mm	335	335	335	335	355	355	355	355
	L	mm	370	370	370	370	420	420	470	470
	M	mm	2000	2000	2000	2200	2200	2200	2200	2200
Connections	d1	water	DN 200	DN 200	DN 200	DN 200	DN 200	DN 200	DN 200	DN 200
	d2	mm	FL 42	FL 42	FL 42	FL 42	FL 54	FL 54	FL 54	FL 54
	d3	mm	FL 80	FL 80	FL 80	FL 80	FL 105	FL 105	FL 105	FL 105
Refrigerant Side Volume	Vr	liter	83,7	96,7	116,5	138,6	166,7	173,8	188,6	213,2
Water Side Volume	Vw	liter	227,4	212,5	189,7	224,3	301,7	293,5	396	369,7
Weight	P	kg	510	528	554	621	740	749	840	873

EXCELLENT - EFFICIENT - ECONOMIC

RPS SERIES			100	135	175	200	255	300	340
Capacity	Q_N	kW	104	135	177	204	260	300	340
Flow Rate	W_N	m³/h	18	24	32	33	46	50	57
Pressure Drop	Δ_P	kPa	32	40	50	31	48	37	48
Circuit Number		nr	1						

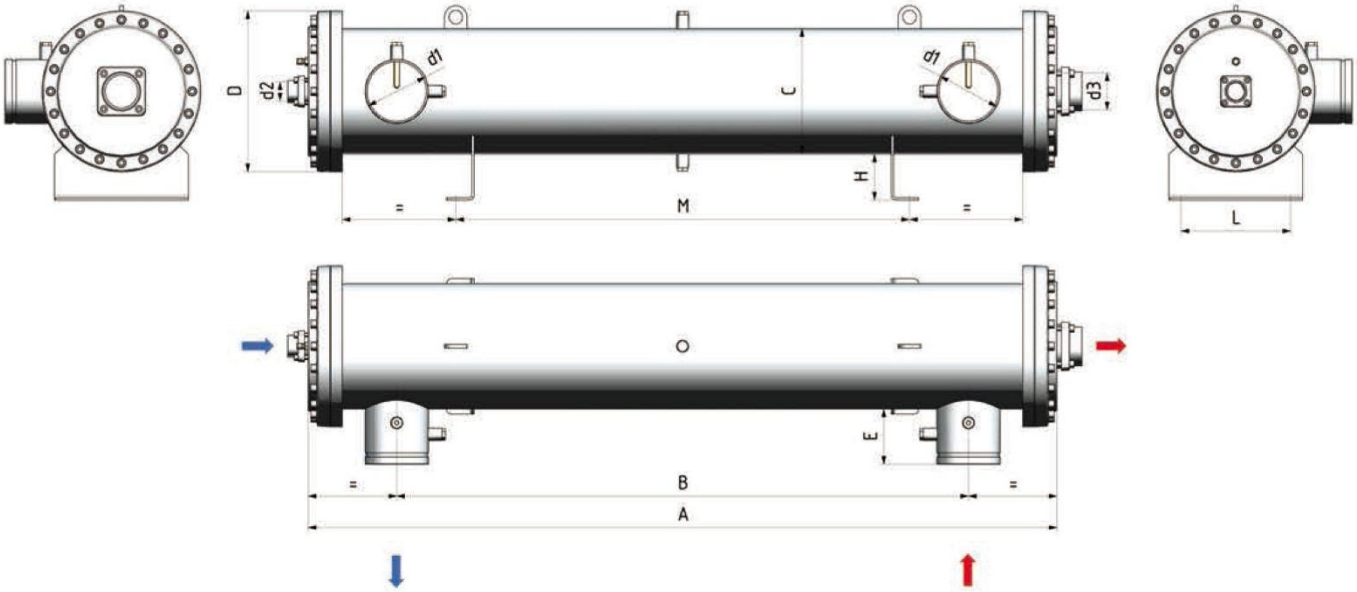

			100	135	175	200	255	300	340
Dimensions	A	mm	1900	2100	2300	2900	2900	2900	2900
	B	mm	1570	1770	1940	2510	2510	2490	2490
	C	mm	219	219	219	273	273	324	324
	D	mm	300	300	300	350	350	420	420
	E	mm	120	120	120	120	120	120	120
	H	mm	80	80	80	100	100	100	100
	L	mm	200	200	200	250	250	280	280
	M	mm	900	1000	1100	1400	1400	1400	1400
Connections	d1	water	J 3	J 3	J 4	J 5	J 5	J 6	J 6
	d2	mm	FL 35	FL 42	FL 42	FL 42	FL 42	FL 54	FL 54
	d3	mm	FL 54	FL 80	FL 80	FL 80	FL 80	W 114	W 114
Refrigerant Side Volume	Vr	liter	18,9	21,2	23,3	31,5	37,4	42,3	46,3
Water Side Volume	Vw	liter	39,3	43,7	49	116	109,1	168,5	163,8
Weight	P	kg	142	151	159	234	241	335	340

R134A EVAPORATORS

390	450	500	580	630	700	800
395	464	520	585	635	700	800
68	79	89	101	109	119	133
40	38	465	41	48	58	69
			1			

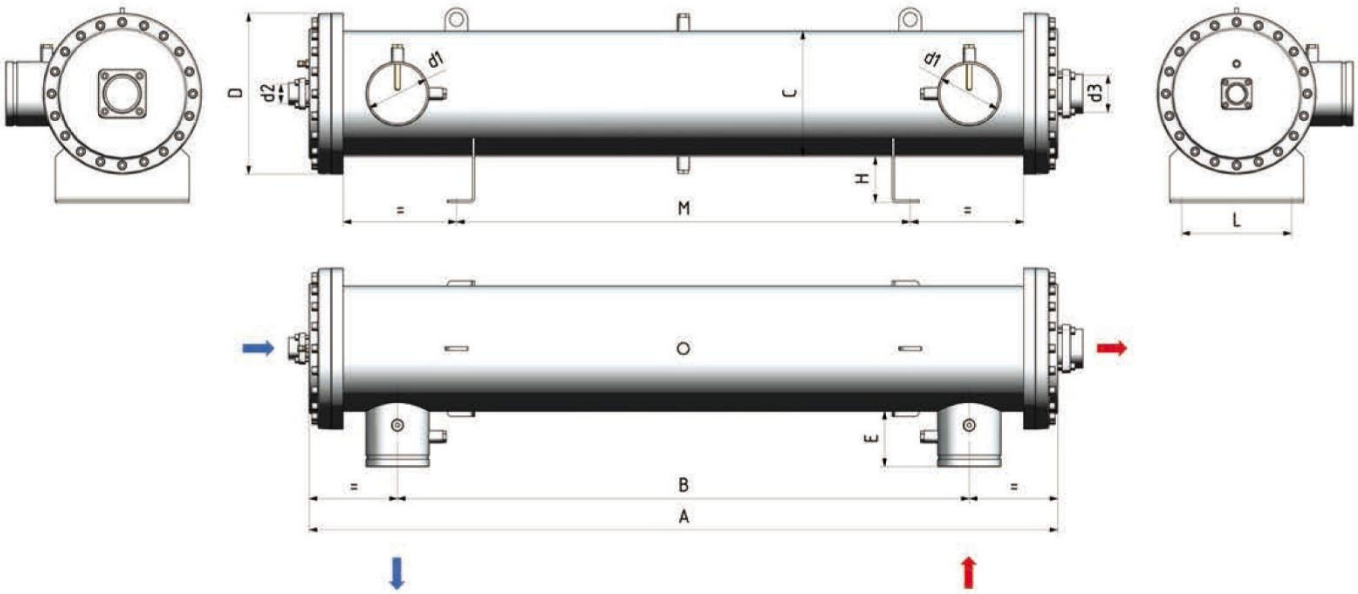

390	450	500	580	630	700	800
2900	2900	3100	3160	3160	3160	3160
2490	2490	2690	2590	2590	2590	2590
324	324	324	406	406	406	406
420	420	420	510	510	510	510
120	120	120	120	120	120	120
100	100	100	100	100	100	100
280	280	280	370	370	370	370
1400	1400	1500	1500	1500	1500	1500
J 6	J 6	J 6	J 6	J 6	J 6	J 8
FL 54	FL 54	FL 54	FL 54	FL 54	FL 54	FL 80
W 114	W 114	W 140	W 140	W 140	W 140	W 140
53,4	65	70,2	77,3	83,2	90,8	98,7
155,5	141,9	152,1	273,3	266,5	257,5	252
344	356	371	573	580	589	592

Nominal Data		
Refrigerant		R 134 A
Water Inlet - Outlet Temparature		12 / 7 °C
Evaporating Temperature (DEW)		3 °C
Superheat	Δt sup.	4 °C
Fouling Factor	f.f.	0,000043 m²K/W

d1	Water Connections	Wn	Water Flow Rate
d2	Refrigerant Inlet	Δ_p	Water Side Pressure Drop
d3	Refrigerant Outlet	S nr	Compressor Circuit Number

EXCELLENT - EFFICIENT - ECONOMIC

RPD SERIES			200	255	300	340	390	460	500	580
Capacity	Q_N	kW	204	260	300	340	395	460	520	585
Flow Rate	W_N	m³/h	33	46	50	57	68	79	89	101
Pressure Drop	Δ_P	kPa	31	48	37	48	40	38	45	41
Circuit Number		nr	2							

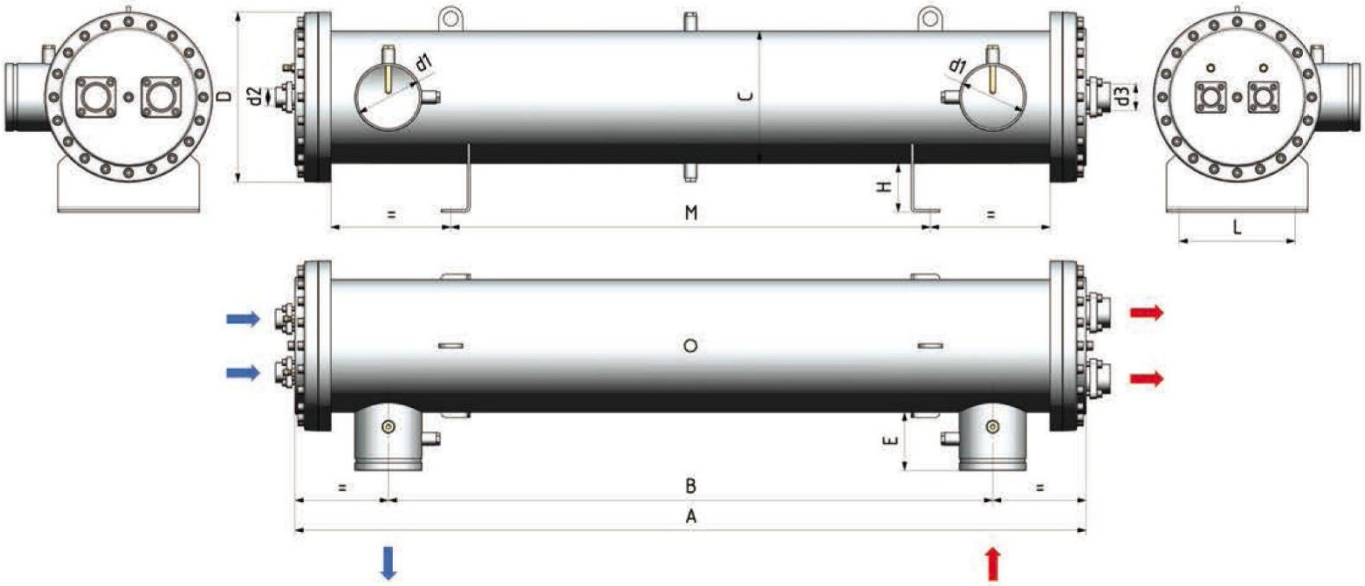

			200	255	300	340	390	460	500	580
Dimensions	A	mm	2900	2900	2900	2900	2900	2900	3100	3160
	B	mm	2510	2510	2490	2490	2490	2490	2690	2590
	C	mm	273	273	324	324	324	324	324	406
	D	mm	350	350	420	420	420	420	420	510
	E	mm	120	120	120	120	120	120	120	120
	H	mm	100	100	100	100	100	100	100	100
	L	mm	250	250	280	280	280	280	280	370
	M	mm	1400	1400	1400	1400	1400	1400	1500	1500
Connections	d1	water	J 5	J 5	J 6	J 6	J 6	J 6	J 6	J 6
	d2	mm	FL 35	FL 42	FL 42	FL 42	FL 42	FL 42	FL 42	FL 54
	d3	mm	FL 54	FL 80	FL 80	FL 80	FL 80	FL 80	FL 89	FL 105
Refrigerant Side Volume	Vr	liter	31,4	37,9	42,4	45,3	53,3	65,2	69,9	77,8
Water Side Volume	Vw	liter	116	109,1	168,5	165,2	155,8	141,9	152	273,3
Weight	P	kg	234	241	335	340	344	356	373	580

R134A EVAPORATORS

	630	700	800	900	1000	1150	1300	1500
	635	699	800	915	1050	1200	1340	1485
	109	119	133	157	177	202	218	238
	48	58	69	62	51	67	74	90
	2							

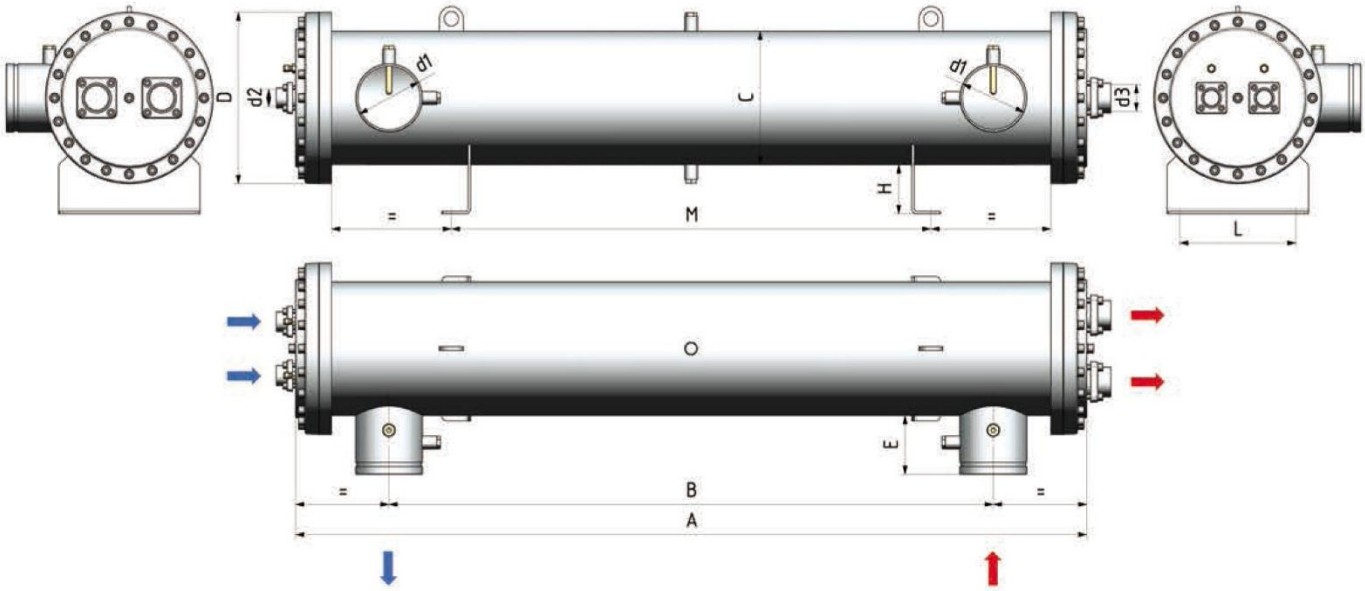

	630	700	800	900	1000	1150	1300	1500
	3160	3160	3160	3360	3360	3360	3560	3560
	2590	2590	2590	2810	2810	2810	3010	3010
	406	406	406	508	508	508	508	508
	510	510	510	620	620	620	620	620
	120	120	120	120	120	120	120	120
	100	100	100	100	100	100	100	100
	370	370	370	470	470	470	470	470
	1500	1500	1500	1600	1600	1600	1700	1700
	J 6	J 6	J 8	J 8	J 8	J 8	J 8	J 8
	FL 54	FL 54	FL 54	FL 54	FL 54	FL 54	FL 54	FL 54
	FL 105	FL 105	FL 105	FL 105	W 140	W 140	W 140	W 140
	83,6	91,2	98,8	117	129	140,7	164,8	179,5
	266,5	257,5	252	475	462,8	449,2	459,6	442,5
	587	596	608	890	894	910	957	977

Nominal Data		
Refrigerant		R 134 A
Water Inlet - Outlet Temparature		12 / 7 °C
Evaporating Temperature (DEW)		3 °C
Superheat	Δt sup.	4 °C
Fouling Factor	f.f.	0,000043 m^2K/W

d1	Water Connections	Wn	Water Flow Rate
d2	Refrigerant Inlet	Δ_p	Water Side Pressure Drop
d3	Refrigerant Outlet	S nr	Compressor Circuit Number

EXCELLENT - EFFICIENT - ECONOMIC

ACCESSORIES

WELDING CONNECTION (W)

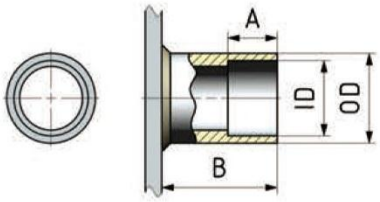

Dimensions				
Code	A	B	ID	OD
W 16	15	30	16,2	21,3
W 19	15	30	19,4	25
W 22	15	30	22,6	26,9
W 28	15	30	28,8	33,7
W 35	15	30	35,4	42,4
W 42	15	35	42,3	48,3
W 54	15	45	54,3	60,3
W 67	20	50	67	76
W 80	20	50	80,5	88,9
W 105	20	50	106	114

FLANGE CONNECTION (FL)

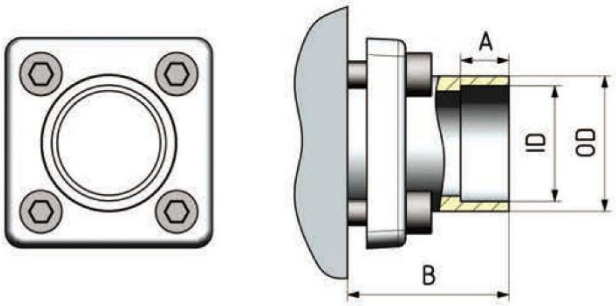

Dimensions				
Code	A	B	ID	OD
FL 16	15	40	16,1	20,5
FL 19	15	40	19,4	24
FL 22	15	40	22,6	28
FL 28	15	40	29	35
FL 35	15	40	35,4	41,4
FL 42	15	40	42	48
FL 54	15	50	54,8	61
FL 67	25	55	67	74
FL 80	25	55	80,5	85
FL 105	25	55	106	115

ROTALOCK CONNECTION (RL)

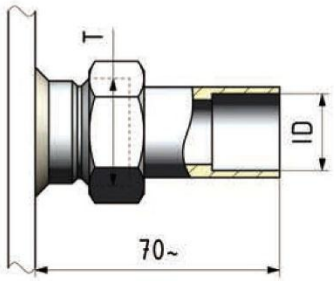

Dimensions		
Code	ID	T
RLA 16	16,2	1"14-UNS
RLA 19	19,4	1"14-UNS
RLB 22	22,6	1¼"12-UNF
RLB 28	28,8	1¼"12-UNF
RLC 28	28,8	1¾"12-UN
RLC 35	35,4	1¾"12-UN
RLC 42	42,3	1¾"12-UN

FLEXIBLE COUPLING (FLC)

Dimensions					
CODE	A~	B~	C~	D	E
J3 FLC089	165	115	50	88,9	80
J4 FLC114	200	145	50	114,3	100
J5 FLC140	245	175	50	139,7	100
J6 FLC168	275	205	55	168,3	150
J8 FLC220	345	265	60	219,1	150

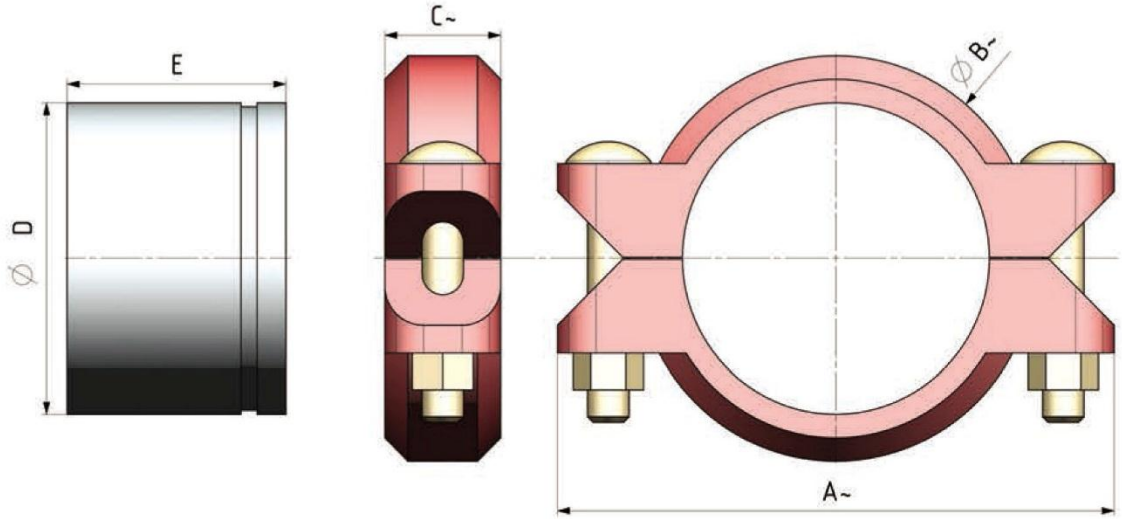

WATER CONNECTION TYPES

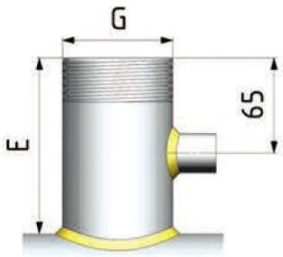

Flare Connection **(G)**

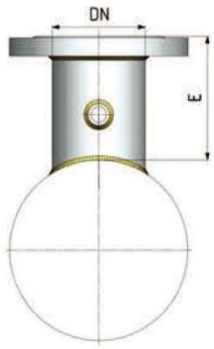

Flange Connection **(DN)**

Dimensions			
CODE	G	DN	E (mm)
G1	G1”	-	120
G11	G1 1/2”	-	120
G2	G 2”	-	120
G21	G 2 1/2”	-	120
G3	G3”	-	120
DN 100	-	114	150
DN 125	-	140	150
DN 150	-	168	150
DN 200	-	220	200